6244 Haptic Puck Switch

Herga Technology Ltd

- High mechanical stability
- Easy to clean
- Haptic feedback in the form of an audible “click” when pressed
- Can be integrated into Herga’s modular footswitch range
- Can be fitted into an external system
- Designed in line with medical standards
- Made with UL approved materials
- Rated IP67

Reference dimensions mm

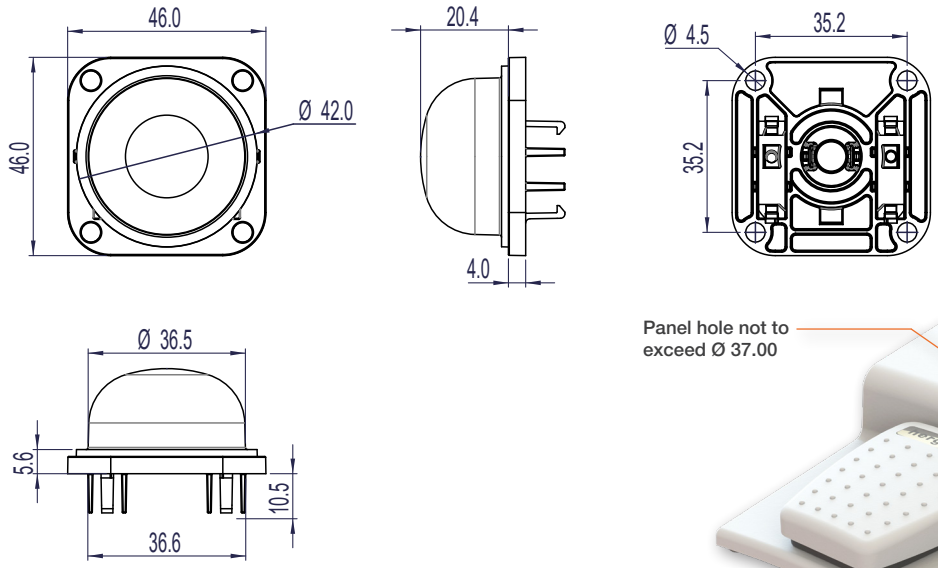

General specifications

Standards/ Approvals	Micro switch UL/cUL/ENEC15
Degree of protection	IP67
Connection method	Flying leads 400 mm long
Micro switch Electrical Rating	0.1A 125/250V AC, 0.1A 30V DC or 3A 24V AC
Contact Configuration	SPDT/ DPDT Momentary
Operating temperature range	10° C to 50° C
Storage temperature range	-20° C to +50° C

Body material	Acetal Copolymer
Bellows material	PVC Bellows
Weight	25g
Average mechanical life	1 x 10^6 (dependent on application)
Additional information	Standard black bellows Additional colours on request Designed to meet IEC 60601-1

Ordering Options

6244 - CC	SPDT CONTACTS, BLACK	MOMENTARY ACTION
6244 - DC	DPDT CONTACTS, BLACK	MOMENTARY ACTION

Stock model :	**6244-CC**

Variohm Holdings Ltd

Herga Technology Ltd - Northern Way - Bury St. Edmunds - Suffolk - IP32 6NN - UK
sales@herga.com • www.herga.com • +44 (0)1284 701422

Subject to change without notice